ESR20-4-1000

[illegible]

- [illegible]
- [illegible]
- [illegible]

[illegible]

[illegible]		[illegible]
[illegible]		[illegible]
[illegible]	[illegible]	[illegible]
	[illegible]	[illegible]
[illegible]		[illegible]
[illegible]	[illegible]	[illegible]
	[illegible]	[illegible]
	[illegible]	[illegible]
[illegible]	[illegible]	[illegible]
	[illegible]	[illegible]
	[illegible]	[illegible]
	[illegible]	[illegible]
[illegible]	[illegible]	[illegible]
	[illegible]	[illegible]
	[illegible]	[illegible]
[illegible]		[illegible]
[illegible]	[illegible]	[illegible]
	[illegible]	[illegible]
[illegible]		[illegible]
[illegible]		[illegible]
[illegible]		[illegible]
[illegible]		[illegible]
[illegible]	[illegible]	[illegible]
	[illegible]	[illegible]

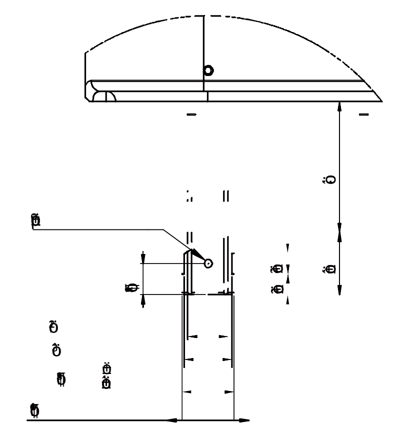

[illegible]

[illegible]